# Heat Transfer Optimization and NOx reduction by FlammaTec burners

**Petr Vojtech – FlammaTec, spol. s r. o.**

**Velke Karlovice – GS Seminar 2017**

# Contents of Presentation

- Introduction (company overview)
- Influence on energy consumption
- Principle of NOx creation
- Advantages of FT burners
- Possible improvement
- Practical examples
- Conclusions

# GS GROUP STRUCTURE

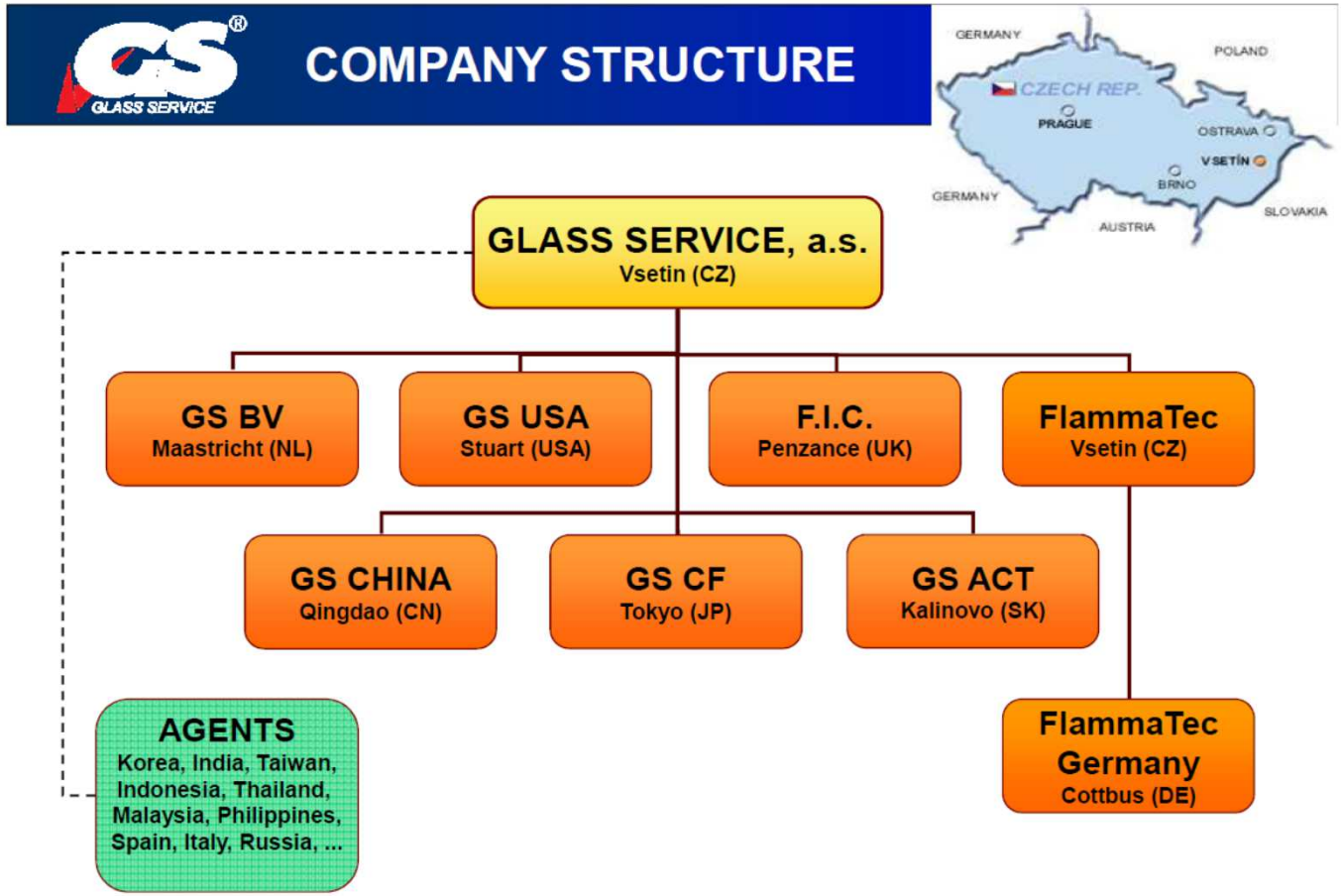

# INTRODUCTION

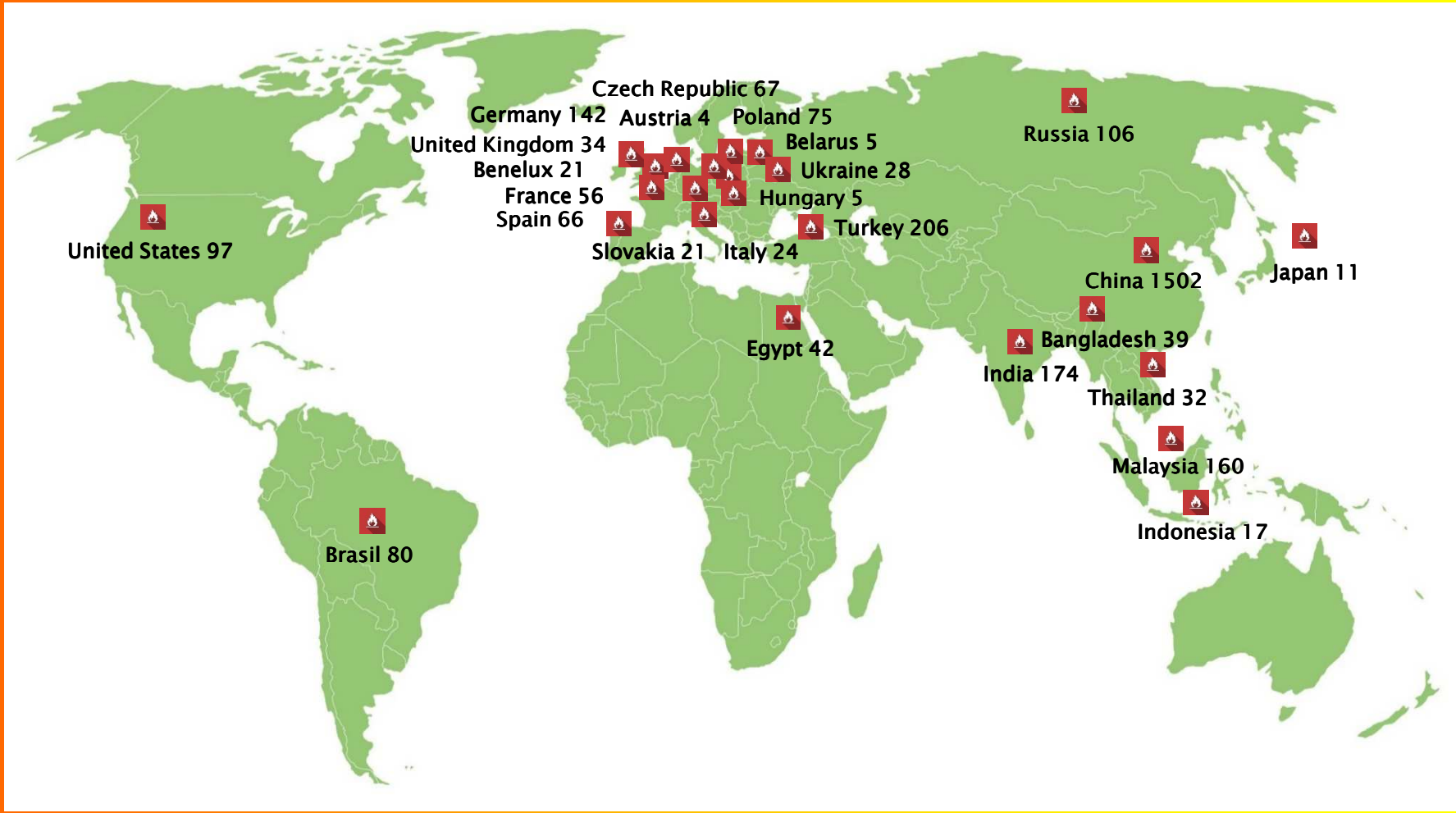


Total number of Flammatec BURNERS: 3014

# Focused on Glass regenerative tanks

- Furnace size
- Furnace design including regenerator design
- Refractory composition
- Control system level
- Combustion system
- Fuel type

# Furnace size and design

- Furnace type – cross fired, end fired, AMCO, etc.
- Length x width ratio
- Glass depth
- Crown height
- Bubbling, boosting
- Staging, oxygen application
- Barrier – air cooled, water cooled

# Regenerator design

- Optimum regenerator size
- Too small = lack of combustion air
- Too big = lower combustion air temperature
- Checkers type and material

# Regenerator design

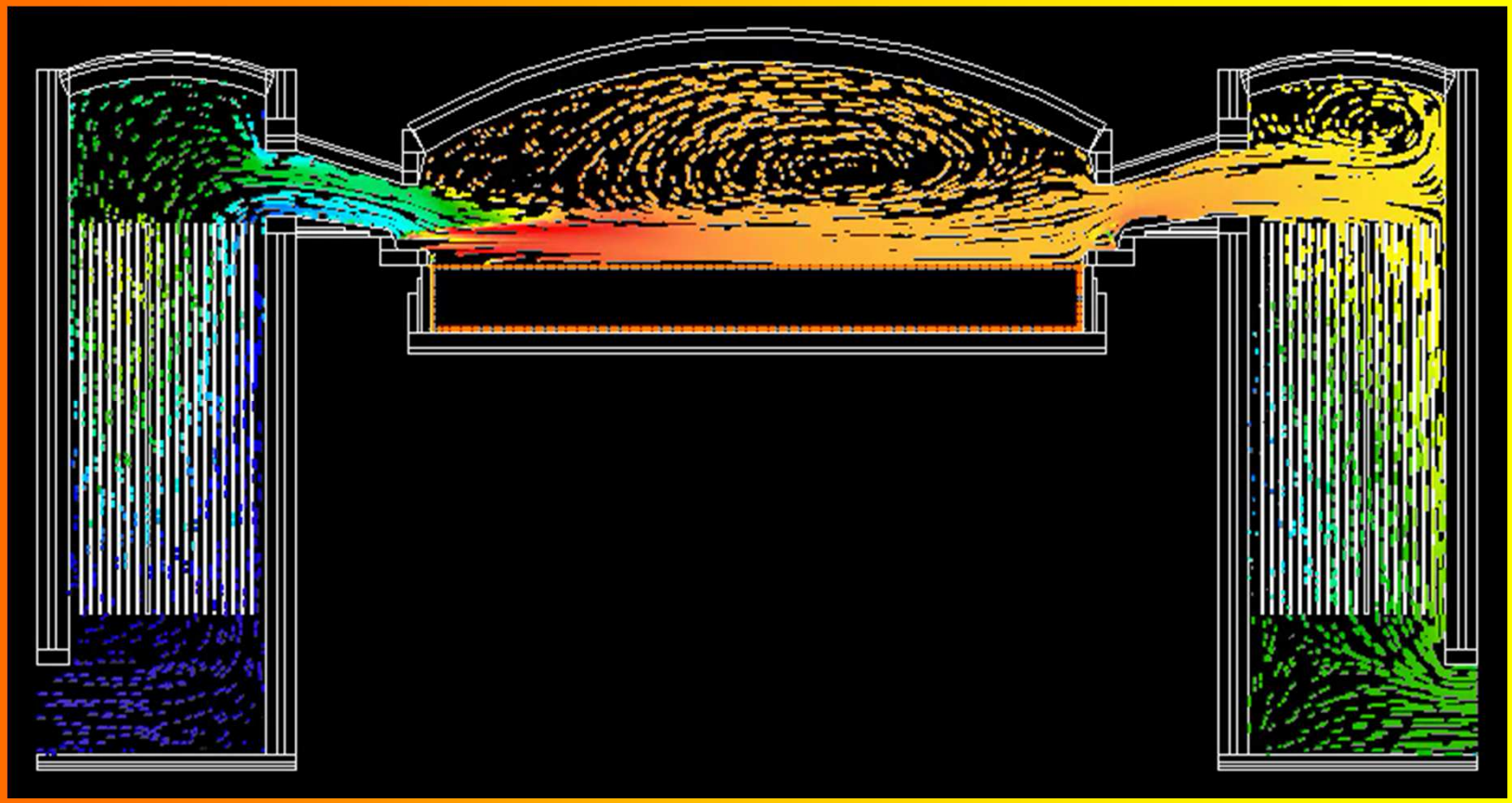

# Refractory composition

- Optimum refractory composition
- Expected furnace life
- Proper insulation

# Control system level

- **Manual control – by operator**
- **Control system – single loop - fuel v. temperature**
- **Advance control system – ES III – multi input and multi output complex solution**

# Control system level

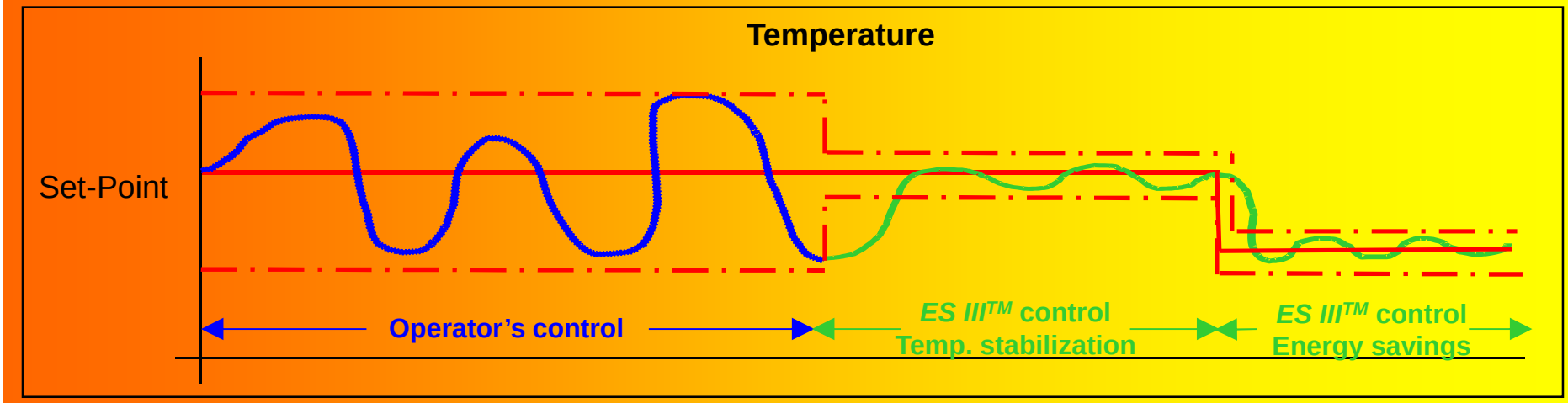


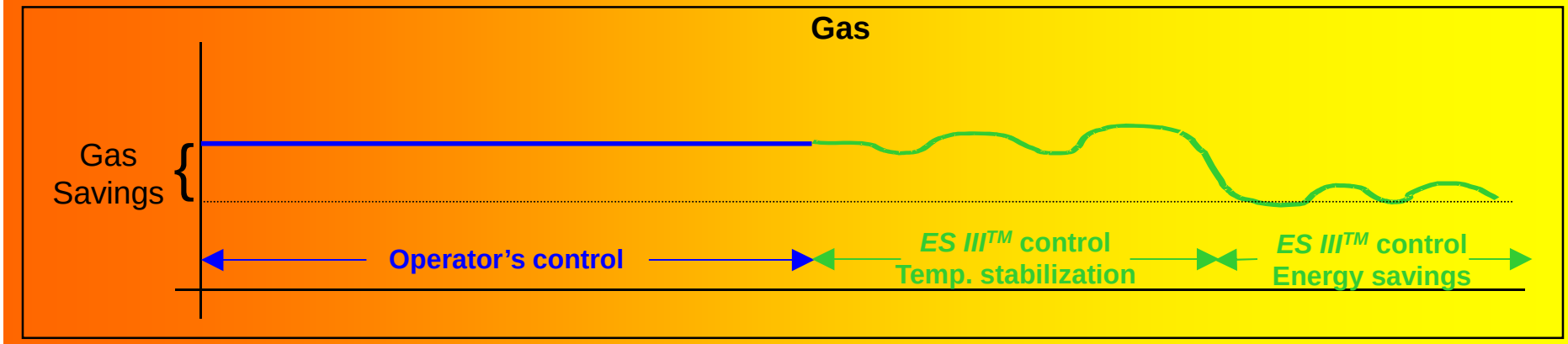

# Combustion system

- Proper burner size and piping dimension
- Performance flexibility
- Optimum gas velocity
- Optimum combustion air velocity
- Optimum angle of gas and air inlet
- Easy and fast adjustment

# Combustion system – FT burner

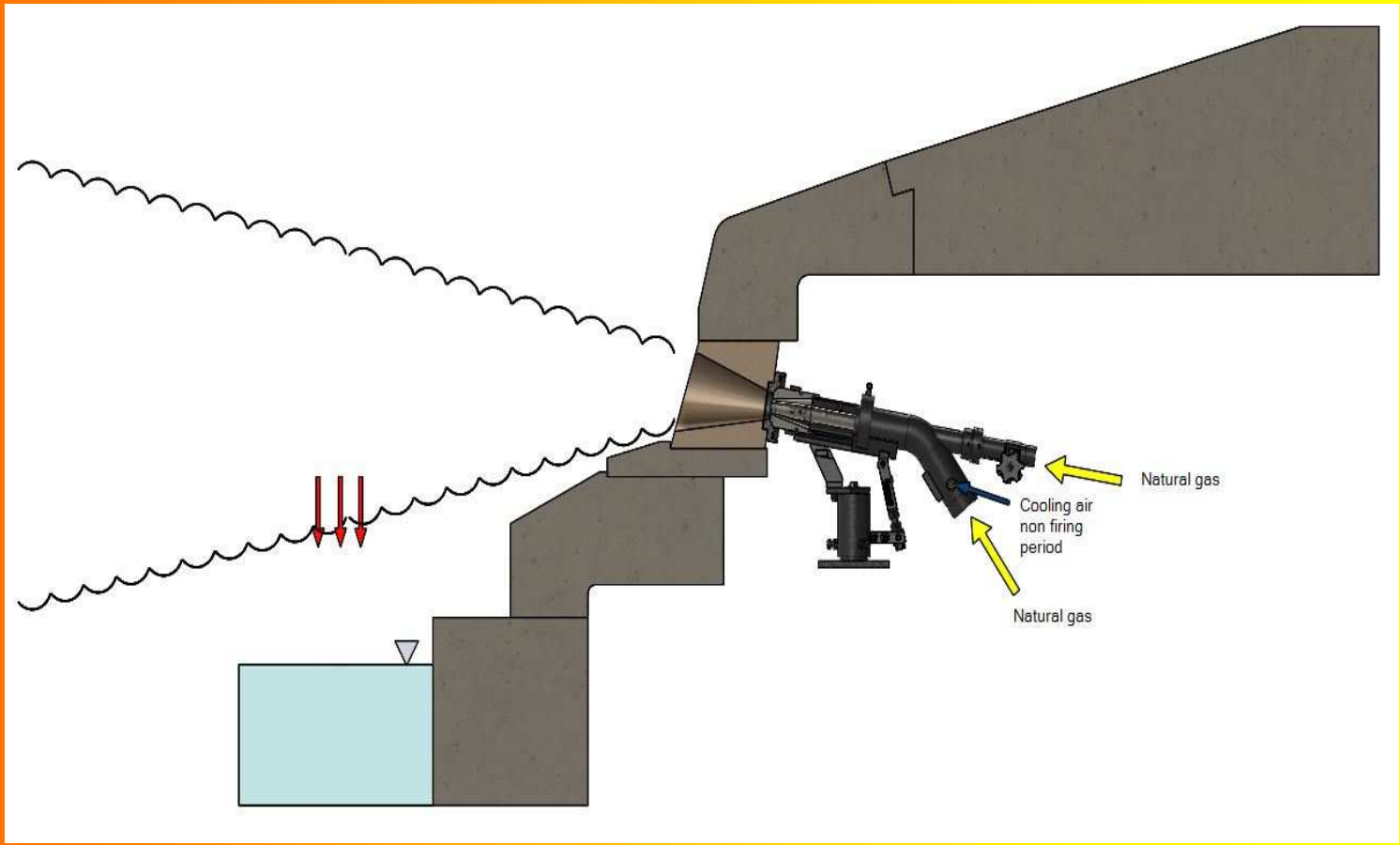

# Fuel type

- Petro coke
- Heavy oil
- Diesel oil
- Natural gas
- Coke oven gas
- Propane
- Biogas
- Various mixtures

# Principal of NOx creation

- Oxygen content
- Nitrogen content
- Flame temperature
- Batch composition

# Principal of NOx creation

- Nitrate decomposition ($KNO_3$ or $NaNO_3$): 600-900 °C
  - $2NaNO_3 \Rightarrow 2NO_2 + Na_2O + 1/2O_2$
  - 600-900 °C
  - Part of $NO_2 \Rightarrow NO + 1/2O_2$
- Fuel bound nitrogen (mainly HCN- components in oil, coal)
- Prompt NOx near flame zone (very rapid):
  - Hydrocarbon radicals reacting first with molecular $N_2$: amines & cyano compounds
- Thermal NOx: according Zeldovich mechanism (strongly temperature dependent)
  - NOx formation takes place when at same moment and position:
    - $O_2$, $N_2$ and high temperature (T > 1350 °C)
    - Main reactions thermal NO:
      - $O + N_2 \Leftrightarrow NO + N$
      - $N + O_2 \Leftrightarrow NO + O$
      - $N + OH \Leftrightarrow NO + H$

# Principal of NOx creation

## Formation of thermal NO in combustion space:

$$dNO/dt = 2[O] \cdot \{k1 \cdot k2[O_2] \cdot [N_2] - k1b \cdot k2b[NO]^2\} / (k2[O_2] + k1b[NO])$$

k1, k2, kb1, kb2 are strongly temperature dependent

Or:

## Formation of thermal NO in combustion space:

$$dNO/dt = K1 \,.\, [N_2] \,.\, [O_2]^{0.5} \,.\, e^{(-316000 / [R\,T])}$$

| | |
|---|---|
| dNO/dt | = NO formation rate |
| $[N_2]$ | = local $N_2$ concentration |
| $[O_2]$ | = local $O_2$ concentration |
| R | = gas constant |
| T | = local temperature |

# Oxygen content

- Proper combustion ratio
- Sucking air - ingressed air
- Oxygen purity in case of oxygen combustion
- Oxygen or air staging

# Nitrogen content

- **Proper combustion ratio**
- **Sucking air - ingressed air**
- **Fuel quality**

# Flame temperature

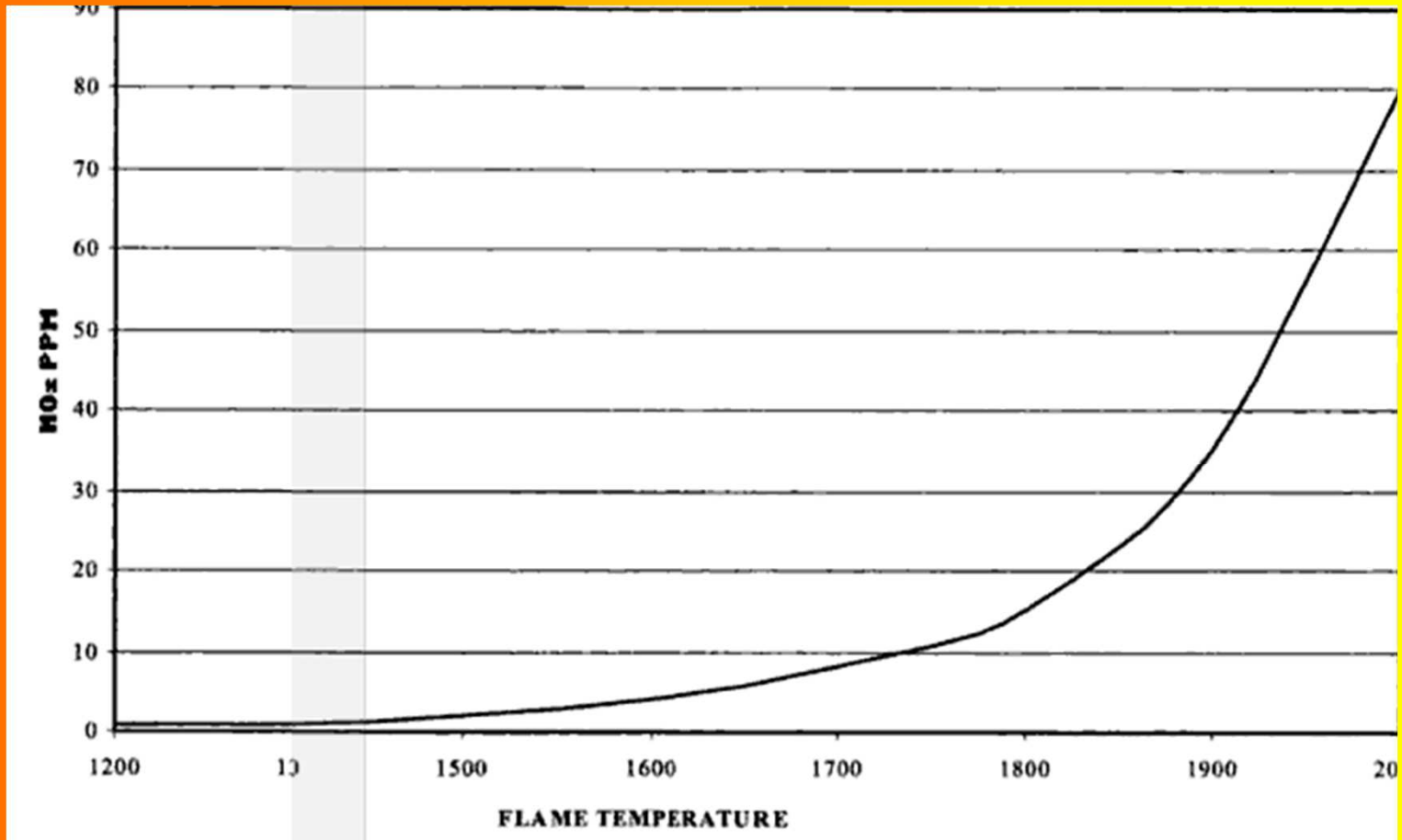


Firelation of Adiabatic Flame Temperature with $NO_x$ Emissions

# Flame temperature

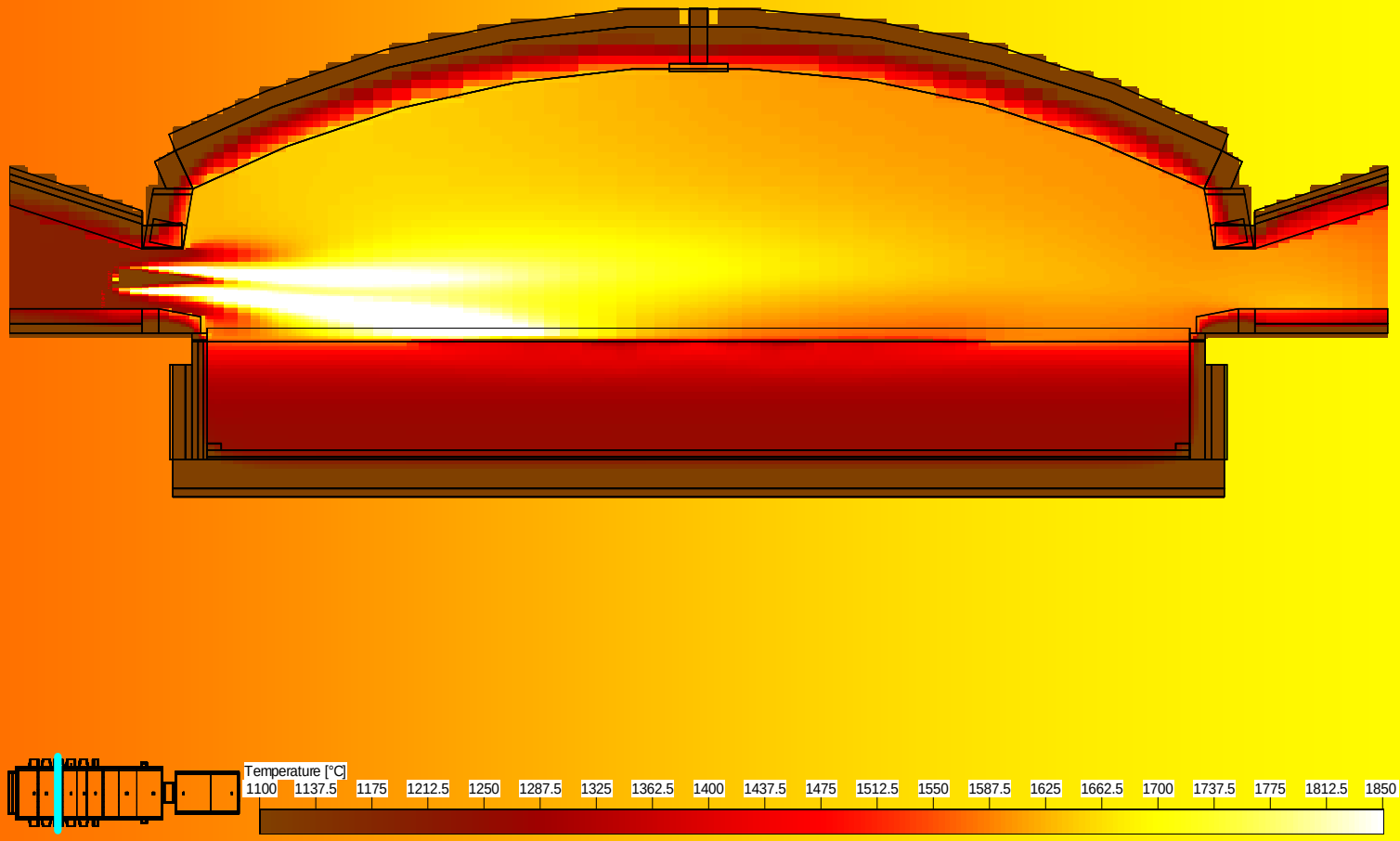

# Flame temperature

Short Flame
& Low emissivity

- Low Energy Transfer Flame - Glass
- High Flame Temperature
- High Flue Gas Temperature
- High Crown Temperature
- High Energy Consumption
- High NOX Emission

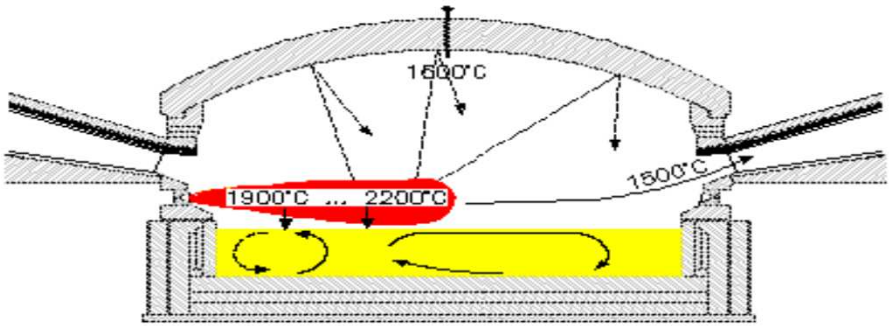


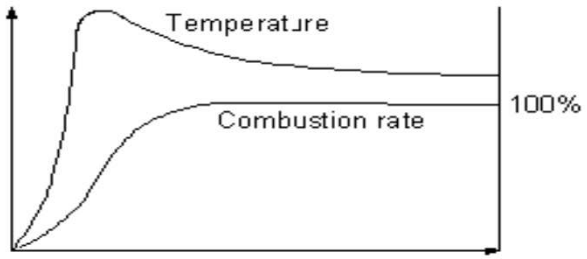


Maximum Flame coverage
& High emissivity

- High Energy Transfer Flame - Glass
- Low Flame Temperature
- Low Flue Gas Temperature
- Low Crown Temperature
- 5 ... 15% Energy saving
- Increased Glass pull
- NOX ~300...600mg/Nm³ (8% O )
  ~100...150 ppm (13% O )

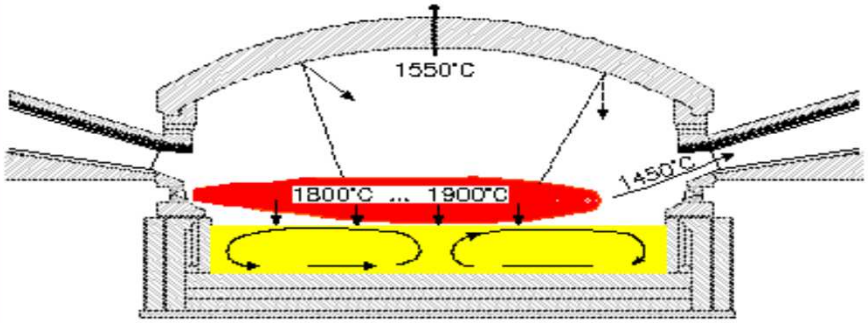


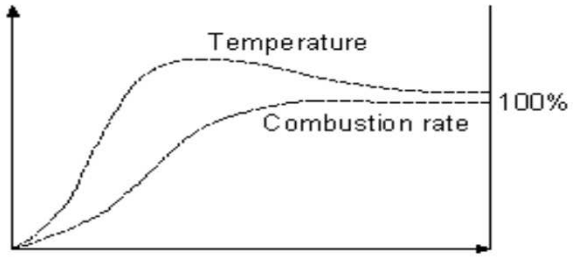

# Long time practical experience

- Each project is tailor made
- Possible hot conversion
- Optimization by GFM software
- Long service life
- Better heat transfer
- Excellent service by educated and experienced staff

# Each project is tailor made

- On – site measurement
- DWG drawing creation
- Adaptation on existing situation
- Burner block design and position optimization
- Possible port design optimization
- Possible remote control of flame length and shape

# Possible hot conversion

- Adaptation to existing burner bracket and socket plate design
- No influence on production quality
- Wide experience with any type of burner replacement
- Energy savings
- NOx level decreasing

# Possible hot conversion – original burner

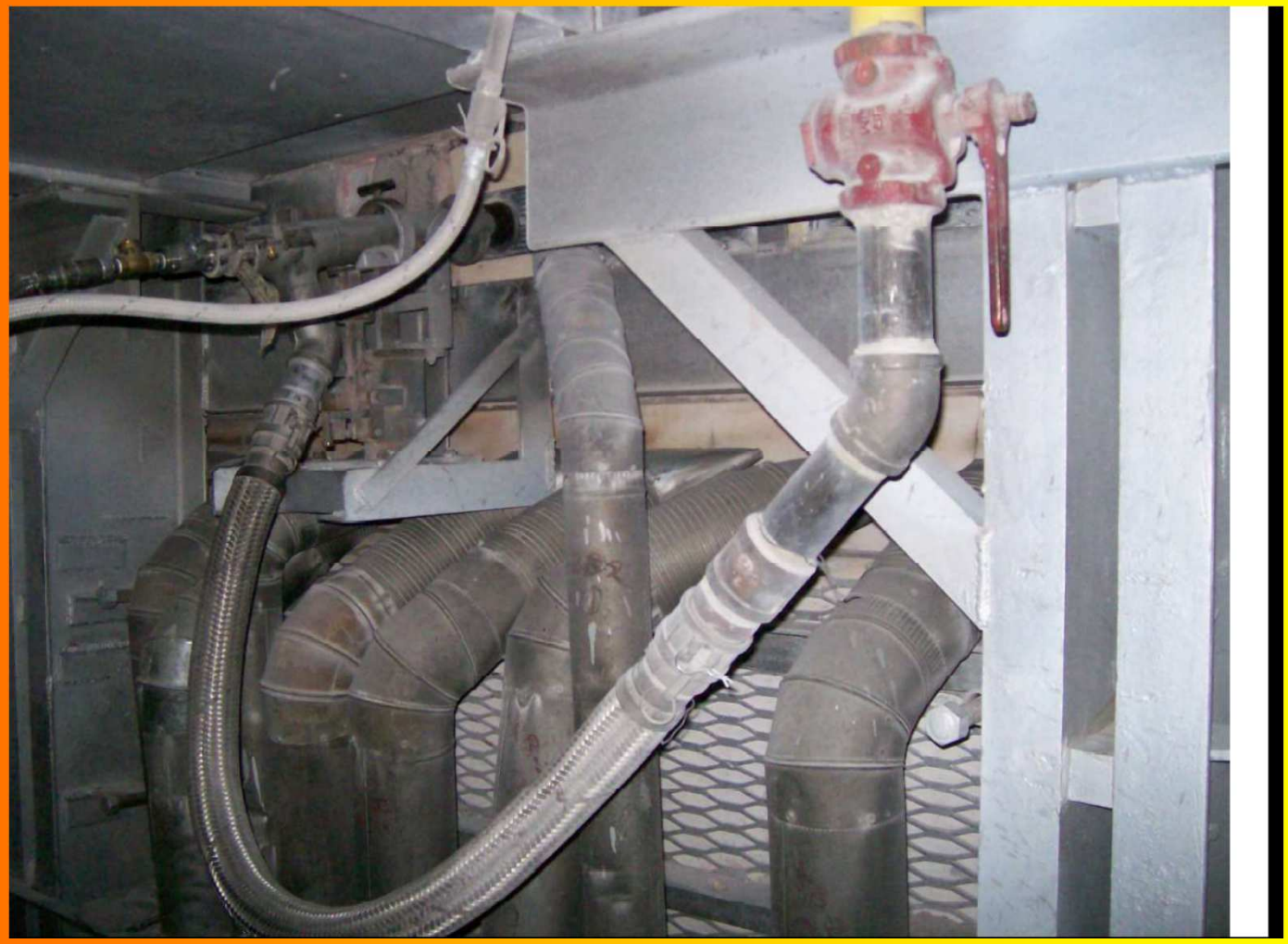

# Possible hot conversion – FT burner

# Optimization by GFM software

- Mathematical simulation of combustion process
- Deep analysis of existing situation
- Consulting with the customer
- Optimum burner design calculation
- Optimum gas distribution

# Optimization by GFM software

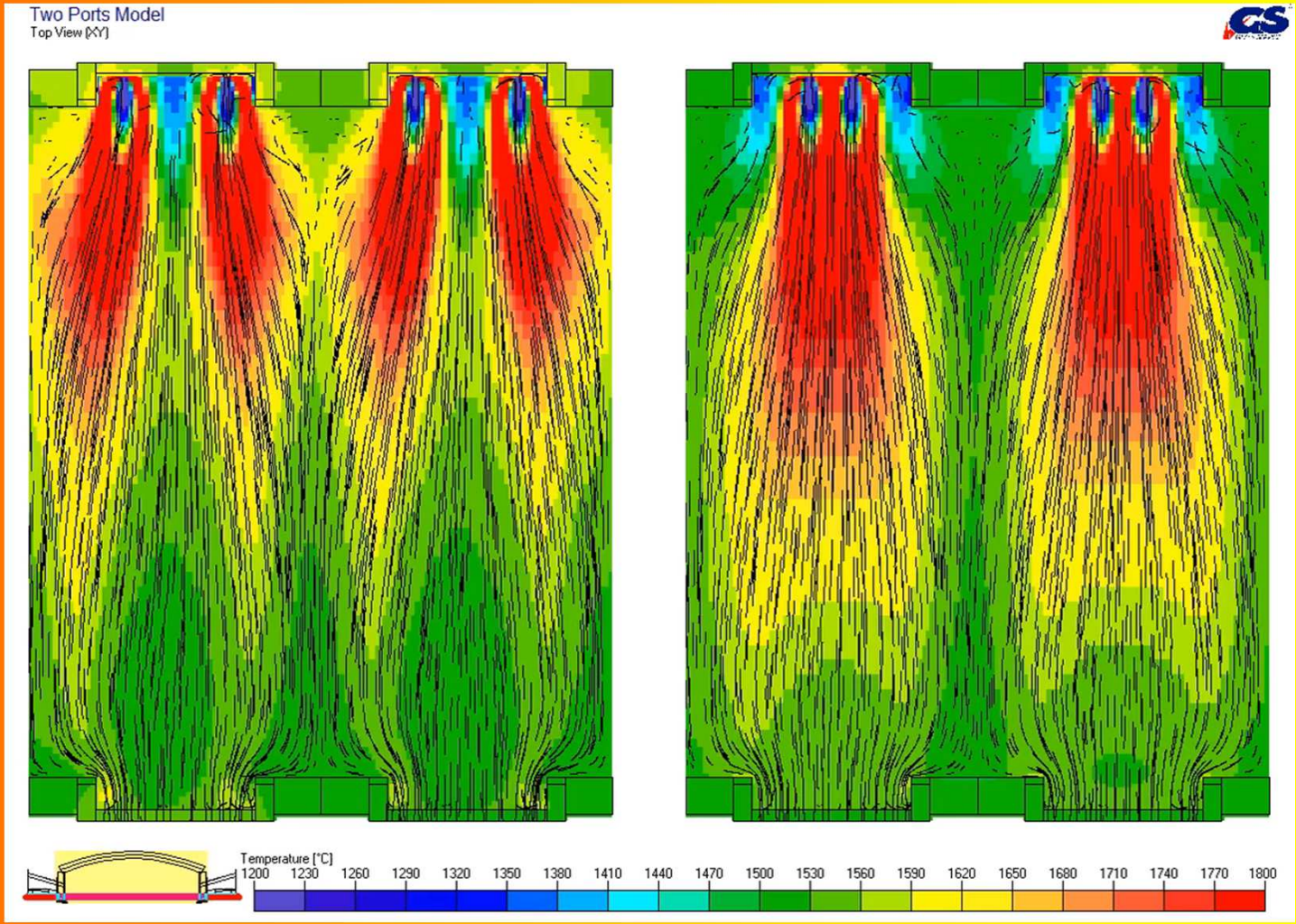

# Optimization by GFM software

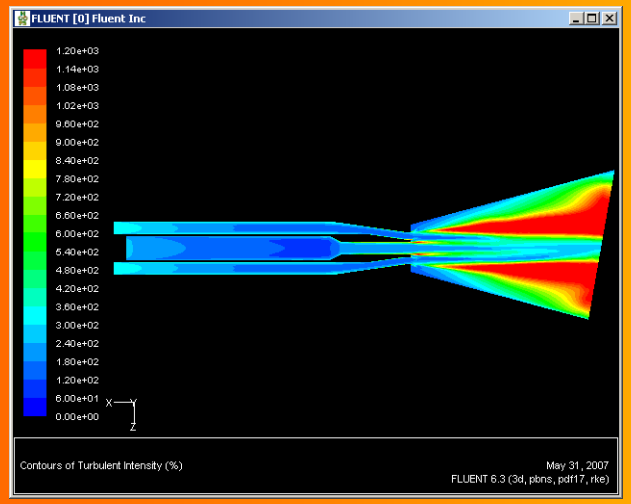

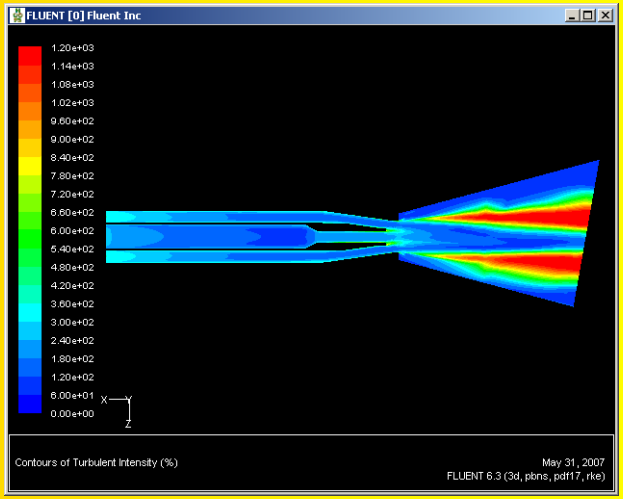

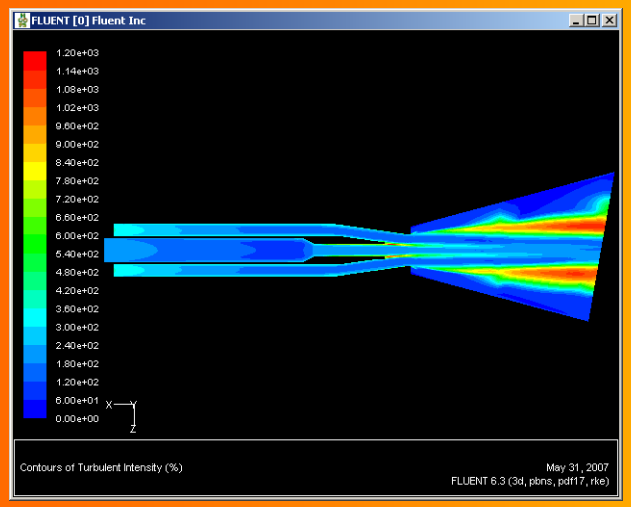

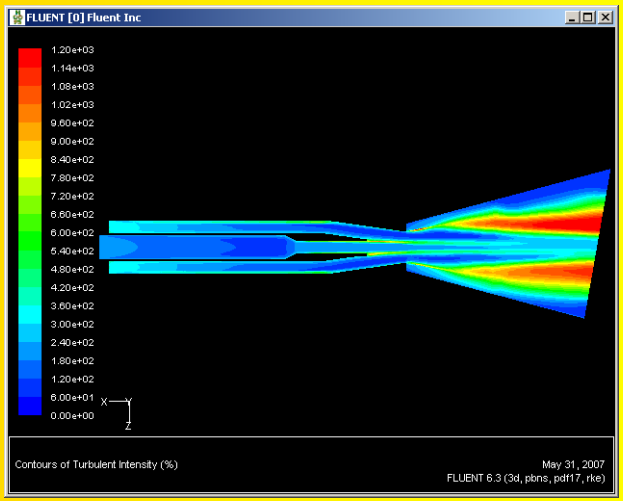

# Long service life and better heat transfer

- Crown temperature decreasing
- Regenerator temperature decreasing
- Bottom temperature raising
- Energy savings or higher pull
- Optimum gas distribution

# Long service life and better heat transfer

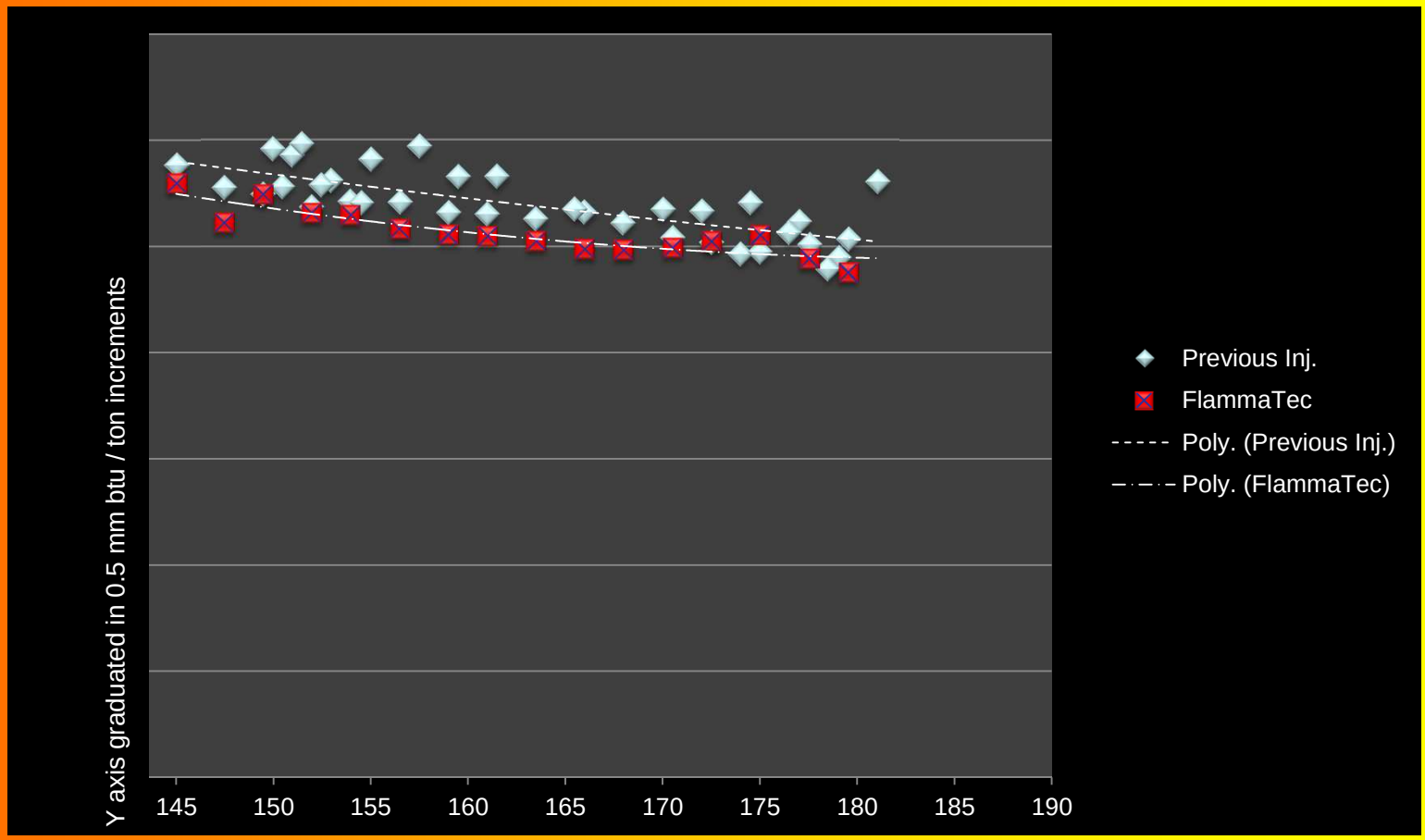

# Long service life and better heat transfer

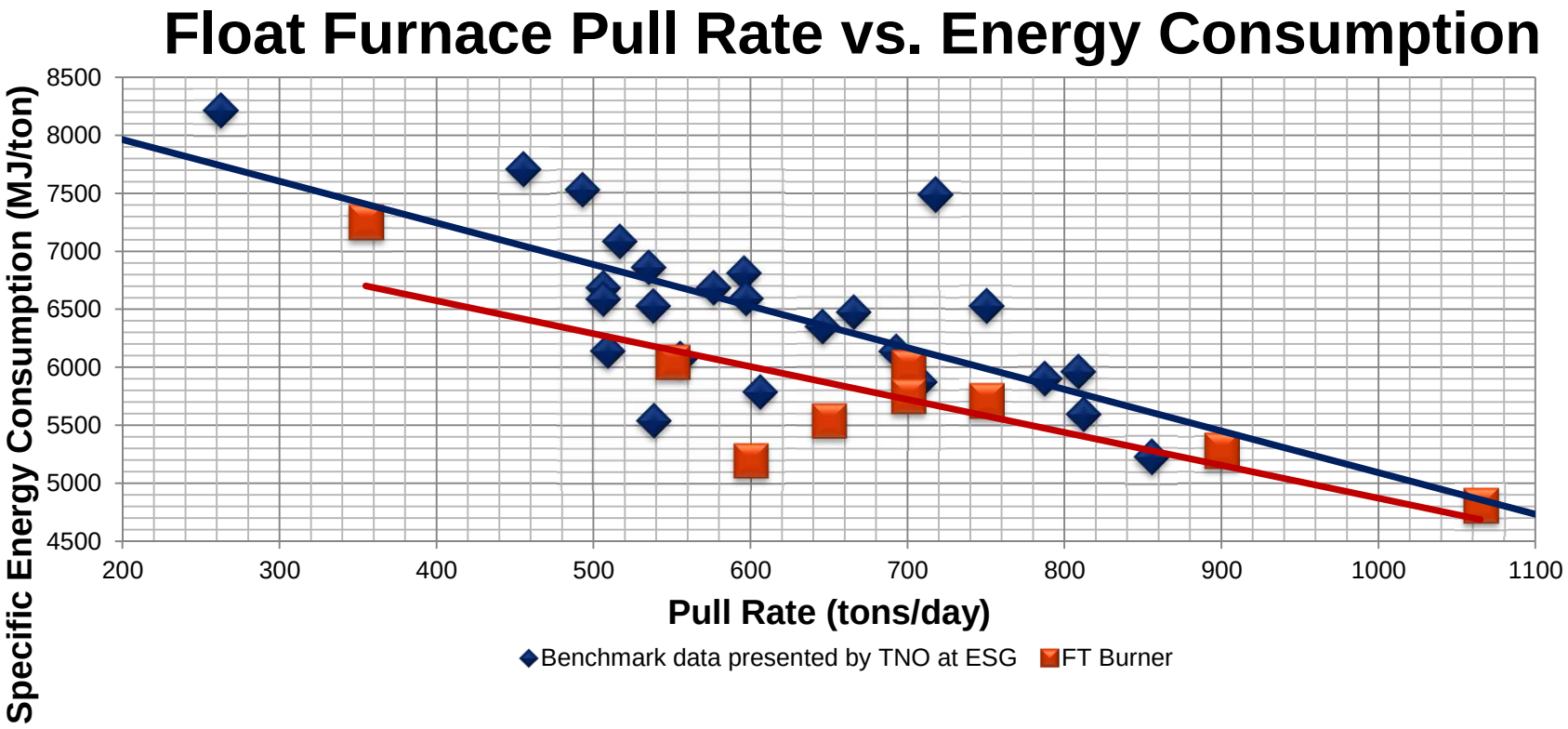

# Excellent service

- Flexible reaction on customer’s request
- Practical experience with glass production
- Support by GS laboratory
- Many offices and agencies worldwide

# Excellent service

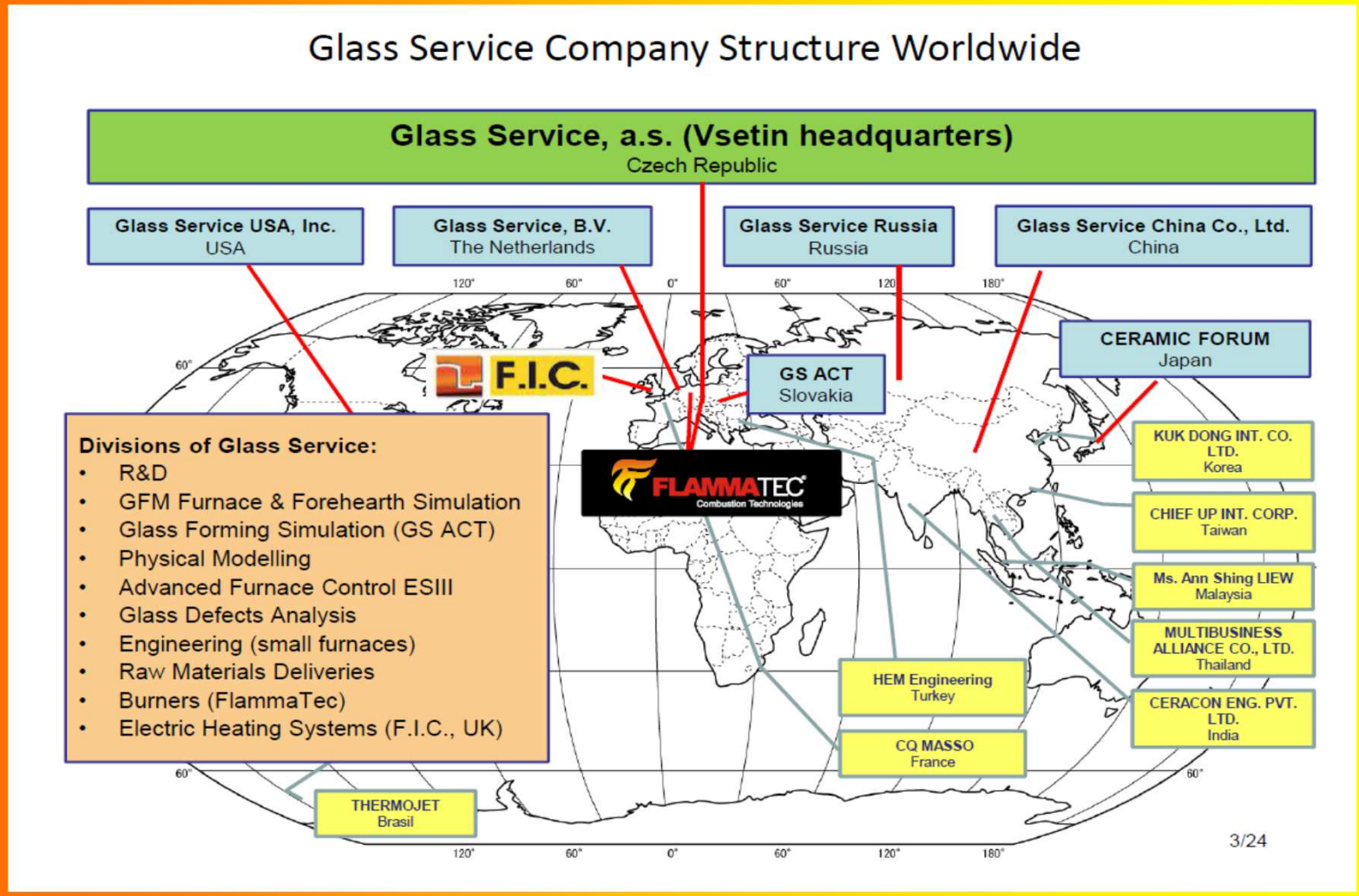

# Possible improvement

- Optimize furnace design with using of GFM
- Installation of proper combustion system – FT
- Installation of O2 and NOx sensors
- Installation of ES III
- Electric boosting
- Air staging
- Oxygen staging

# Optimize furnace design

**Optimize furnace design by utilizing furnace modelling [adjustment to combustion size, air flow (oxidizer) speed and angle, fuel (gas) injection speed, and angle will provide the most optimal scenario]**

# Installation of FT burners

**Install flexible adjustable fuel (gas) injector to vary speed, momentum and angle independent of total gas input (eg FlammaTec Flex or Freejet)**

# Installation of O2 and NOx sensors

**Install $O_2$ (and $NO_x$) sensors to check and control the optimum actual stoichiometry**

# Installation of ES III

**Install reliable high-level, closed-loop control of stoichiometry and furnace temperatures (e.g. model-based control such as *ES III*™)**

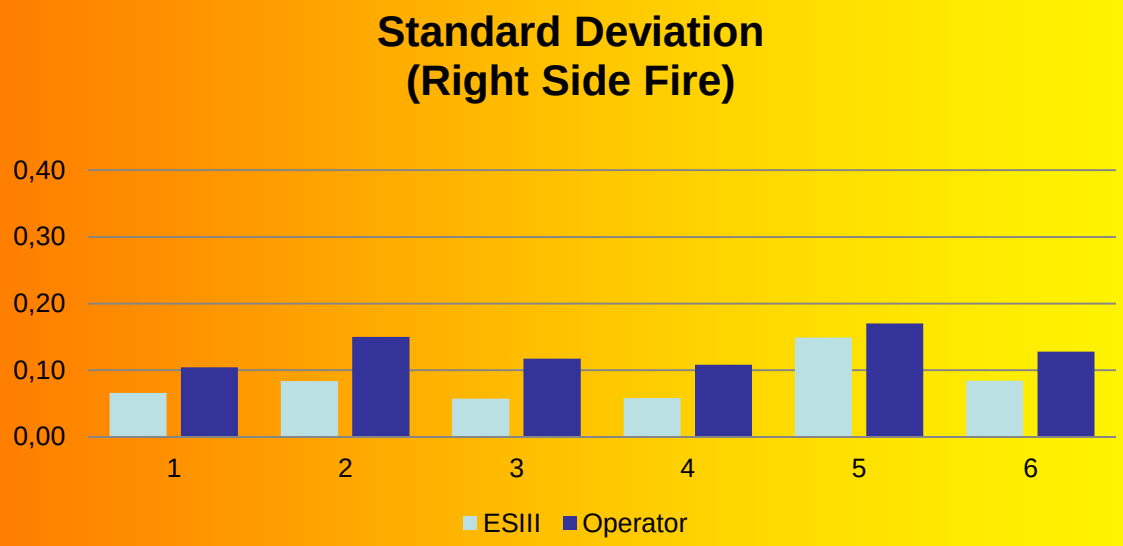

# Electric boosting

- Decreasing of crown temperature
- Less fuel
- Less oxygen from combustion air
- Still question about Nox level, created in power station

# Air staging

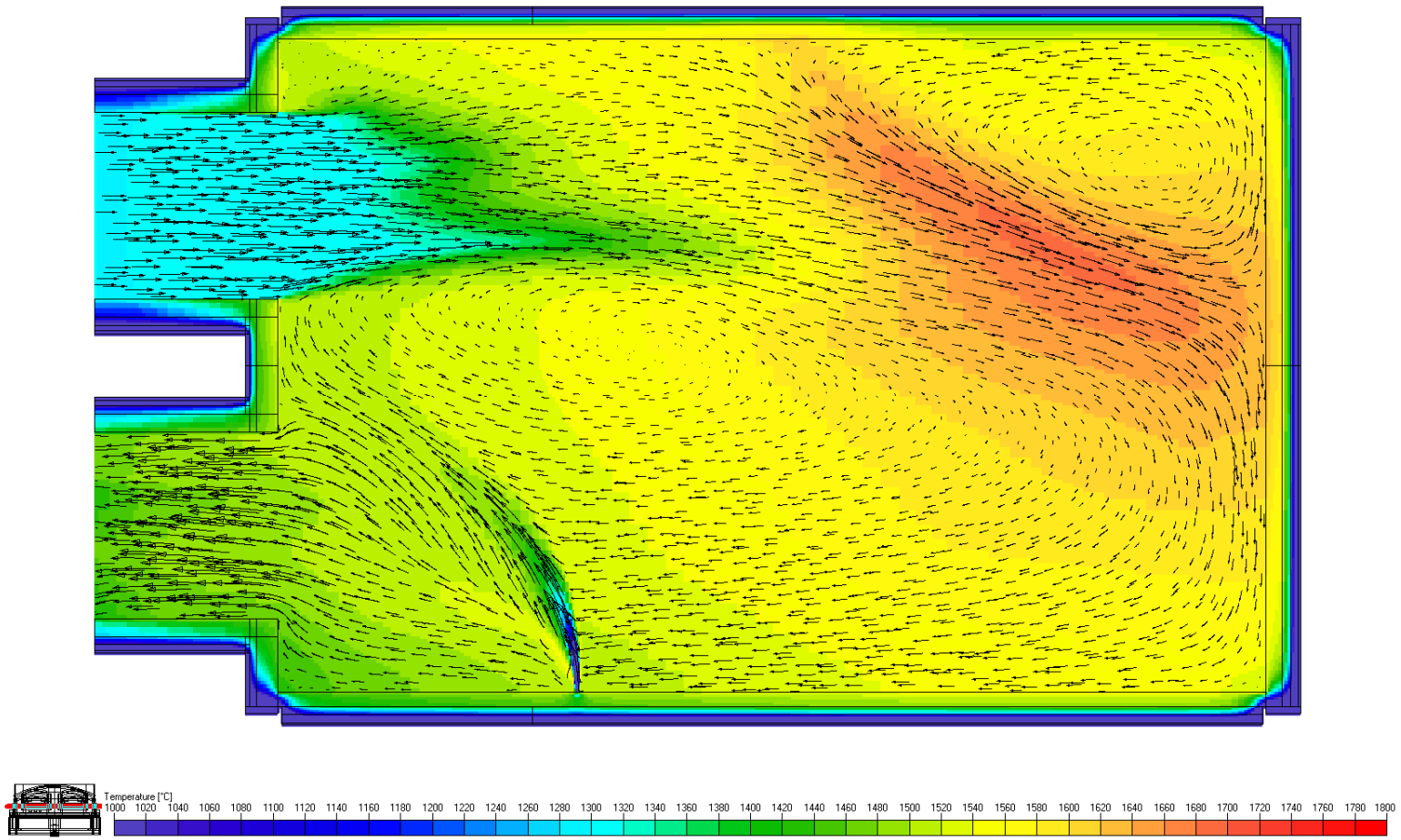
Temperature [°C]
1000 1020 1040 1060 1080 1100 1120 1140 1160 1180 1200 1220 1240 1260 1280 1300 1320 1340 1360 1380 1400 1420 1440 1460 1480 1500 1520 1540 1560 1580 1600 1620 1640 1660 1680 1700 1720 1740 1760 1780 1800

# Air staging

- Optimum location for staging air
- Proper amount of staging air
- Higher energy consumption
- Additional costs for vent

# Oxygen staging

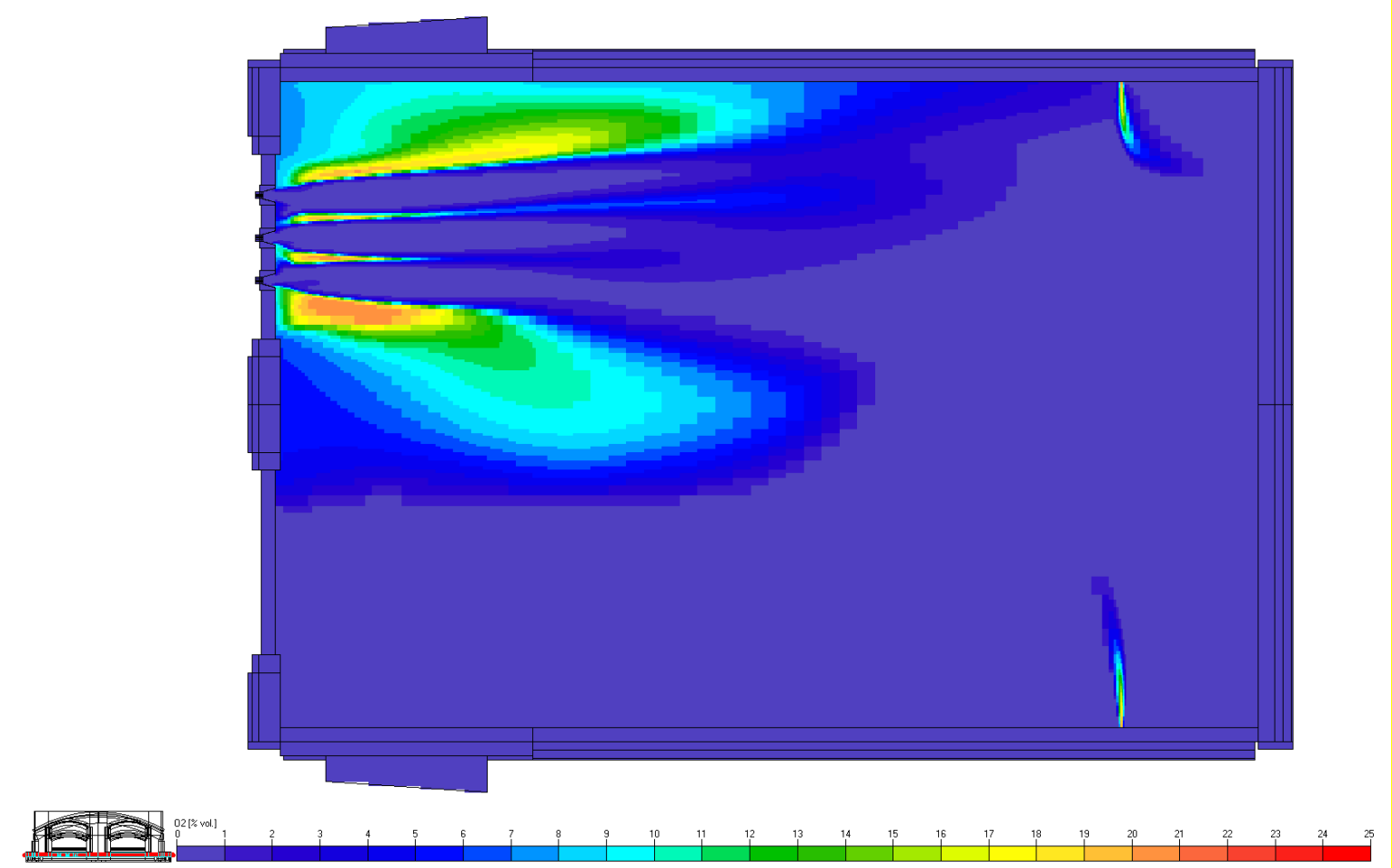

# Oxygen staging

- Optimum location for staging oxygen
- Proper amount of staging oxygen
- Lower energy consumption – energy savings
- Additional costs for oxygen

# Practical examples

**Furnace type** : tableware
**Glass type**: SODA – LIME Glass
**Pull**: 100 MTPD
**Cullet**: 23 %
**Total gas consumption** : 648 Nm3/h
**Heat value of gas** : 10390 kcal/kg
**Combustion heat :** 6029 KW
**Melter area** : 34.2 m2
**Glass depth melter:** 1245 mm
**Spec. pull :** 2.92 MTPD/m2
**Spec. energy consumption:** 5.209 MJ/kg
**NOx level** : 2 250 mg/Nm3

**Old burners**

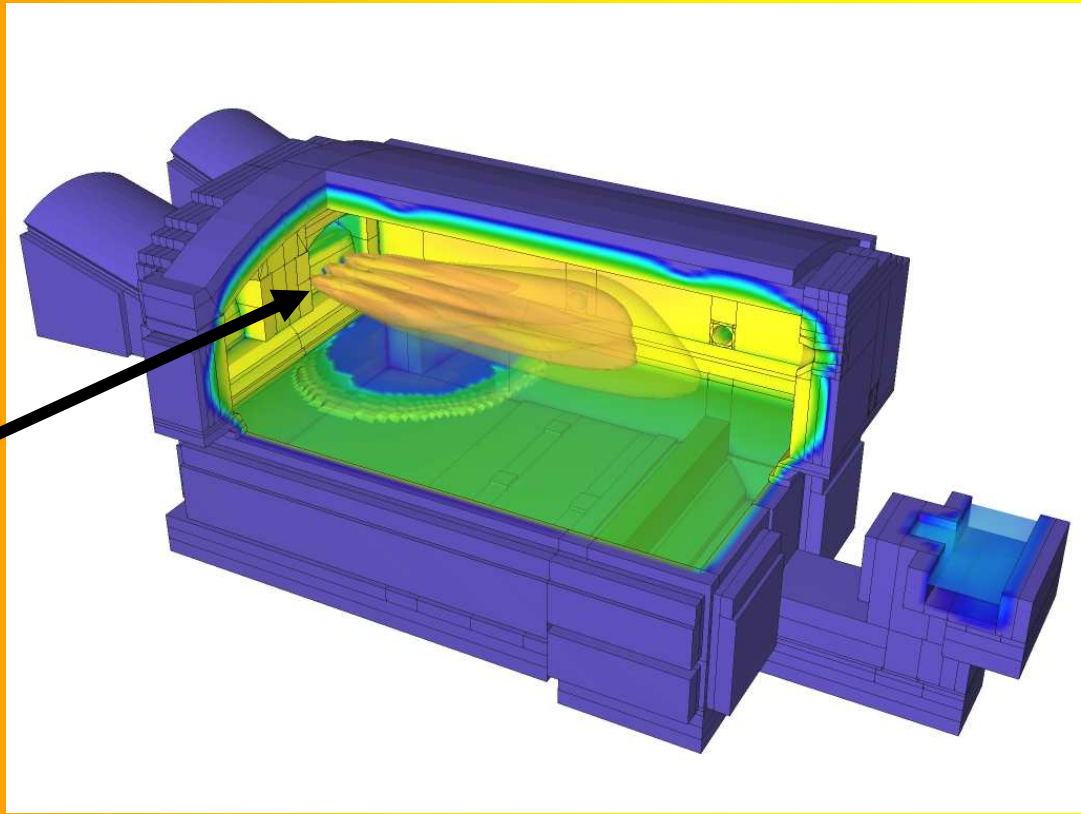

# Practical examples

**Furnace type** : tableware
**Glass type**: SODA – LIME Glass
**Pull**: 100 MTPD
**Cullet**: 23 %
**Total gas consumption** : **612 Nm3/h**
**Heat value of gas** : 10390 kcal/kg
**Combustion heat :** **5697 KW**
**Melter area** : 34.2 m2
**Glass depth melter:** 1245 mm
**Spec. pull :** 2.92 MTPD/m2
**Spec. energy consumption:** **4.922 MJ/kg**
**NOx level** : **1 430 mg/Nm3**

**FT burners**

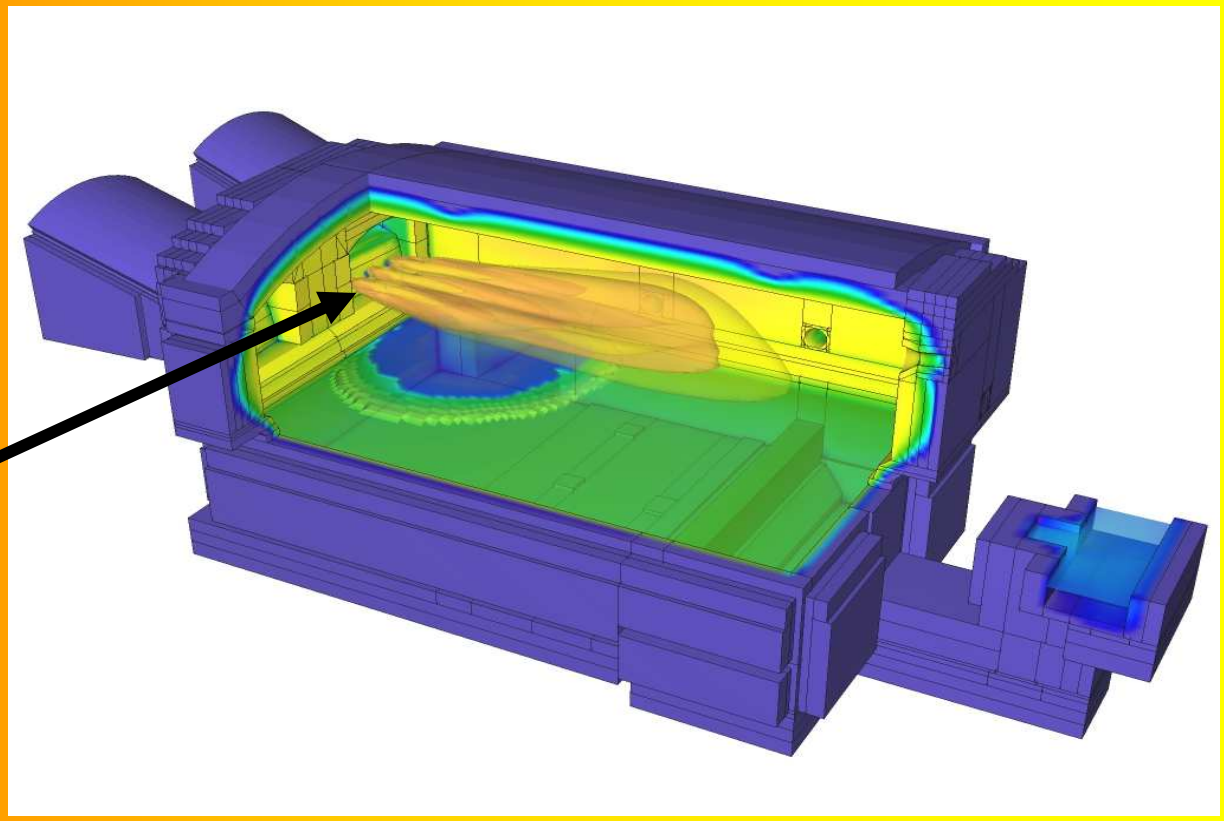

# Practical examples

**Furnace type** : container
**Glass type**: Green
**Pull**: 251 MTPD
**Cullet**: 53 %
**Total gas consumption** : 1 005 Nm3/h
**Heat value of gas** : 11 192 kcal/kg
**Combustion heat :** 9550 KW
**Melter area** : 82.8 m2
**Glass depth melter:** 1150 mm
**Spec. pull :** 3.03 MTPD/m2
**Spec. energy consumption:** 3.66 MJ/kg
**NOx level** : 920 mg/Nm3
**El. Boosting : 1082 kW**

**Old burners**

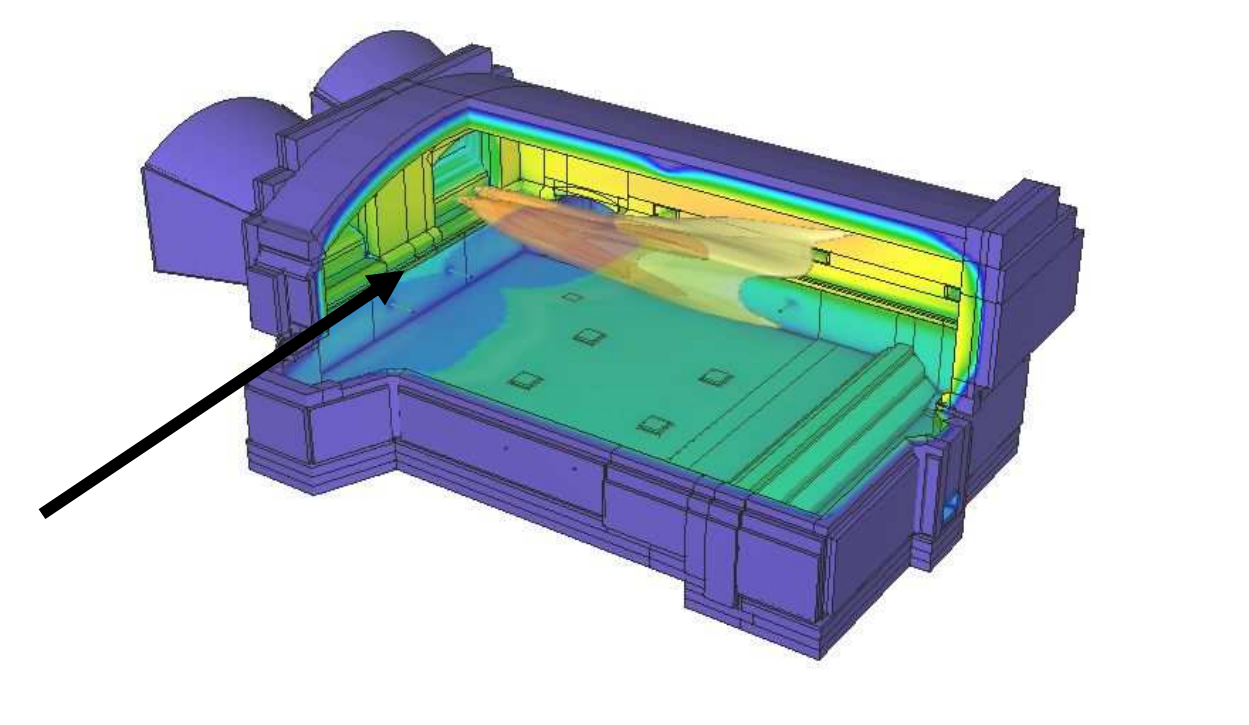

# Practical examples

**Furnace type** : container
**Glass type**: Green
**Pull**: 251 MTPD
**Cullet**: 53 %
**Total gas consumption** : **963 Nm3/h**
**Heat value of gas** : 11 192 kcal/kg
**Combustion heat :** 9550 KW
**Melter area** : 82.8 m2
**Glass depth melter:** 1150 mm
**Spec. pull :** 3.03 MTPD/m2
**Spec. energy consumption**: **3.54 MJ/kg**
**NOx level** : **650 mg/Nm3**
**El. Boosting : 1082 kW**

**FT burners**

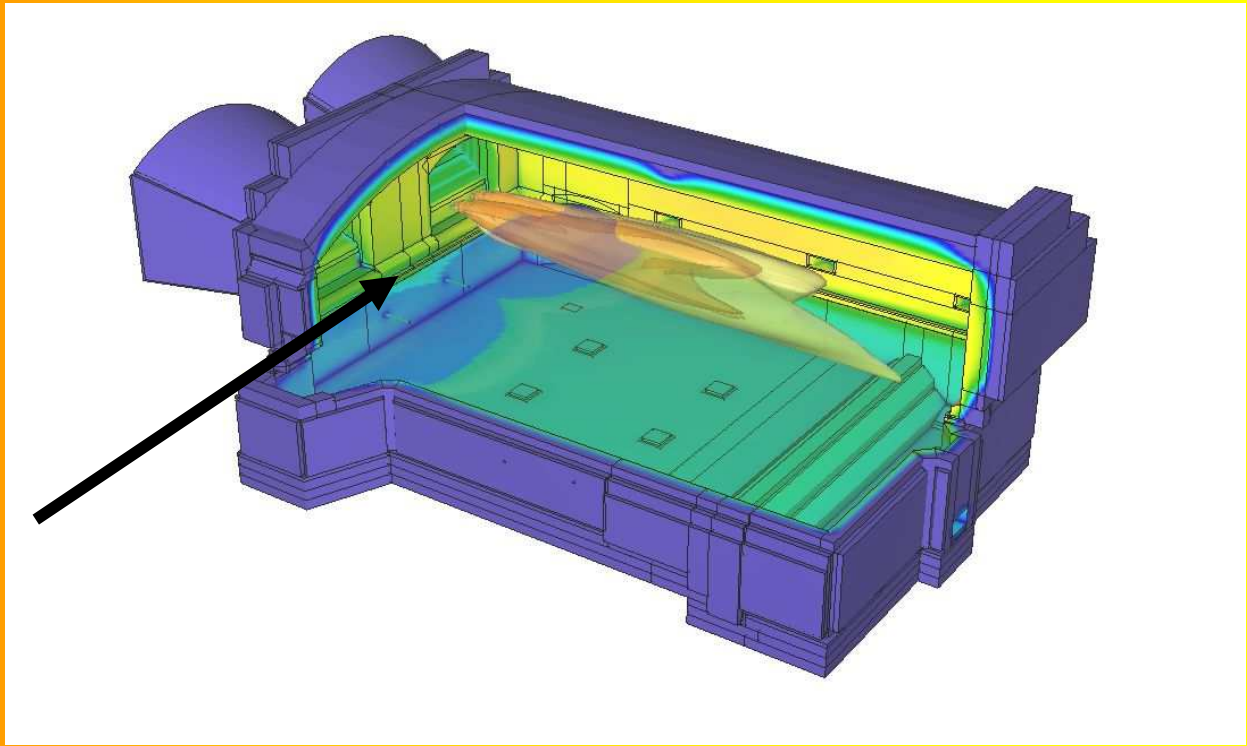

# Practical examples

| | PREVIOUS BURNERS | FT BURNERS | DIFFERENCE |
|---|---|---|---|
| **End fired furnace - tableware** | | | |
| Total energy consumption Nm3/h | 648 | 612,3 | 5,51 |
| Specific energy consumption MJ/T | 5 209 | 4 922 | 5,51 |
| NOx level | 2 250 | 1 430 | 36,65 |
| **End fired furnace -container** | | | |
| Total energy consumption Nm3/h | 1005 | 963 | 4,18 |
| Specific energy consumption MJ/T | 3,66 | 3,54 | 3,28 |
| NOx level | 920 | 650 | 29,35 |
| **End fired furnace - tableware** | | | |
| Total energy consumption Nm3/h | 543 | 514 | 5,34 |
| Specific energy consumption MJ/T | 5 135 | 4 861 | 5,34 |
| NOx level | 2375 | 1625 | 31,58 |

# Practical examples

| | PREVIOUS BURNERS | FT BURNERS | DIFFERENCE |
|---|---|---|---|
| **Cross fired furnace - float** | | | |
| Total energy consumption Nm3/h | 4 820 | 4 615 | 4,25 |
| Specific energy consumption MJ/T | 6 200 | 5 937 | 4,25 |
| NOx level | 2 420 | 1 870 | 22,67 |
| **End fired furnace -container** | | | |
| Total energy consumption Nm3/h | 1050 | 960 | 8,58 |
| NOx level | 3 300 – 3 800 | 1 200 – 1 400 | 63,4 |

# Conclusion

## The practical results fully confirmed the expected benefits

- flame is easy to tune from short turbulent shape up to a long low turbulent shape and highly luminous flame
- highly luminous stable flame is achieved
- batch melting was enhanced after a change to FLAMMATEC burner creating shorter batch piles
- bottom temperatures were visibly increased, allowing glass quality improvements and a fuel reduction

**Contact:** **FlammaTec, Ltd.**

**Rokytnice 60, 755 01 Vsetin**
**Czech Republic**

**T: +420 571 498 566**
**F: +420 571 498 599**
info@flammatec.com

**www.flammatec.com**

FLAMMATEC®
Combustion Technologies